2.15 TU-GX

Channel nut

Material	Coating	Valid for
Steel	Zinc-plated	Indextrut slotted channel

Installation Data

Code	A	B	C	ØD	E
TUGX08	20	6	35	M8	12,5
TUGX10	20	8	35	M10	12,5

Drawing

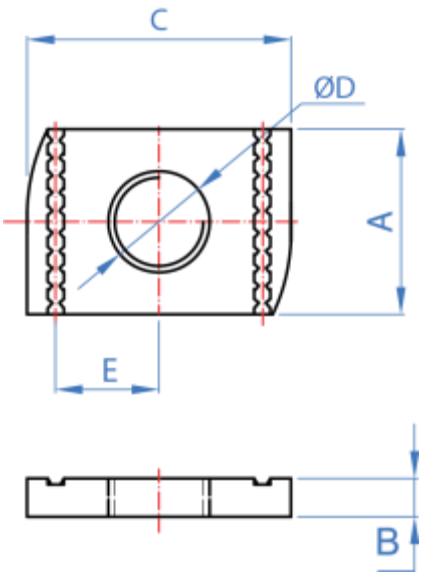

Maximum recommended sliding and tension loads

Code	Channel	Installation torque [Nm]	Sliding load [kN]	Tension load [kN]
TUGX08	GPX414120	14.9	0.75	6.20
TUGX10	GPX414120	25.8	0.89	7.74
TUGX08	GPX414125	14.9	0.75	6.20
TUGX10	GPX414125	25.8	0.89	7.74