INDE

Denomination: **HOLLOW WALL ANCHOR**	Codes: **INCO, INSI, INPISANIN, INPINZANI**		
Reference: **FT INDE-en**	Date: **25/09/19**	Revision: **10**	Page: **1 of 5**

IN-CO

IN-HE

IN-SI

INPISANIN

INPINZANI

CHARACTERISTICS

- Anchor for hollow elements as airbrick, dry wall, plaster wall, etc.
- Maximum load in thin walls due to its expansion design.
- Versions with Ph slotted recess screw, hexagonal head screw and without screw.
- Easy, fast and controlled installation. Requires a special tool.
- Previous installation or thought out the material to be fixed.
- Available special pliers to use in difficult accessibility places.
- After Installation screw can be replaced with another same metric size screw.

BASE MATERIAL

USE EXAMPLES

Examples: Fixing air conditioning systems, television devices, frames, furniture, etc.

1. RANGE AND ACCESORIES

CODE	PHOTO	ITEM	MATERIAL
IN-CO		Bolt Sleeve	Zinc plated steel ISO 4042 ≥ 5 µm Zinc plated steel ISO 4042 ≥ 5 µm
IN-HE		Bolt Sleeve	Zinc plated steel ISO 4042 ≥ 5 µm Zinc plated steel ISO 4042 ≥ 5 µm
IN-SI		Sleeve	Zinc plated steel ISO 4042 ≥ 5 µm
INPISANIN		Body Handle	Steel Plastic covered steel For sizes M4, M5, M6, and M8
INPINZANI		Body Handle	Steel Plastic covered steel For sizes M4, M5 and M6

2. INSTALLATION DATA

All the data needed in order to do a proper installation of the product is detailed as follows. Base material thickness ranges are specified, depending on the value of this field, the maximum fixture thickness may vary. Example: for INCO565, when h_{min} = 20 mm, the maximum fixture thickness will be 35 mm. These values may change depending on the length of the screw for INSIXXX. Para una correcta instalación h1 > L.

CODE			Bolt metric	Ø Drillbit	Bolt length*	CASE 1**	CASE 2
Ph slotted recess Bolt	Hexagonal head Bolt	Sleeve only	M [mm]	d_0 [mm]	L [mm]	Base Material Thickness h_{min} [mm]	Maximum fixture thickness t_{fix} [mm]
INCO421	---	**INSI421**	M4	8	30	1 ÷ 5	17 - h_{min}
INCO432	---	**INSI432**			41	3 ÷ 10	22 - h_{min}
INCO438	---	**INSI438**			47	9 ÷ 16	30 - h_{min}
INCO446	---	**INSI446**			53	15 ÷ 22	33 - h_{min}
INCO459	---	**INSI459**			67	31 ÷ 36	52 - h_{min}
INCO537	---	**INSI537**	M5	10	46	5 ÷ 14	26 - h_{min}
INCO552	---	**INSI552**			59	6 ÷ 18	42 - h_{min}
INCO565	---	**INSI565**			72	16 ÷ 33	55 - h_{min}
INCO580	---	**INSI580**			89	33 ÷ 46	61 - h_{min}
---	---	**INSI619**	M6	12	-	1 ÷ 2	2 - h_{min}
INCO637	---	**INSI637**			46	5 ÷ 13	25 - h_{min}
INCO652	---	**INSI652**			59	6 ÷ 17	38 - h_{min}
INCO665	---	**INSI665**			72	14 ÷ 32	49 - h_{min}
INCO680	---	**INSI680**			89	34 ÷ 46	78 - h_{min}
	INHE837	---	M8	14	45	5 ÷ 13	25 - h_{min}
---	**INHE855**	**INSI855**			60	6 ÷ 18	36 - h_{min}
---	**INHE865**	**INSI865**			73	17 ÷ 33	47 - h_{min}

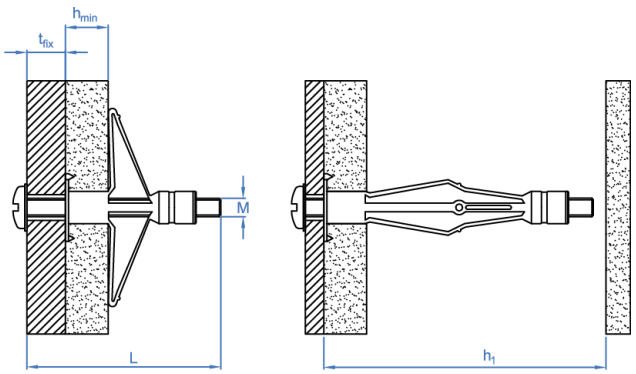

(*) Bolt is not included for INSI version

(**) t_{fix} may change depending on the base material thickness in every case.

3. PRODUCT INSTALLATION

3.1. PREVIOUS INSTALLATION

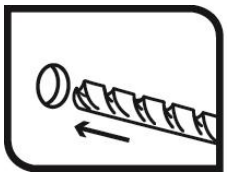

1. DRILL
Drill base material to the specified diameter. Do not use hammerdrill option.

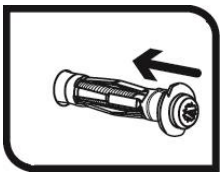

2. INSERT
Insert the bolt with the hand until it is fully attached to the base material.

Hammer can be used if necessary.

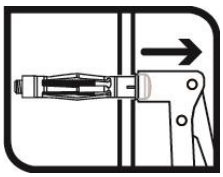

Place the bolt into the installation gun. Push the trigger until the anchor is fully expanded.

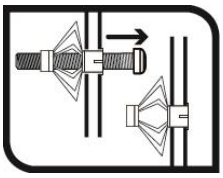

Remove the gun and unthread the bolt.

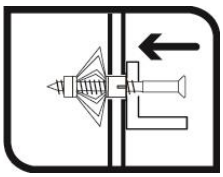

3. FIXING THE OBJECT
Place the material to be fixed.
Introduce the bolt and fasten it.

In case of difficult access materials special installation gun (INPINZANI) is recommended instead of normal gun (INPISANIN).
In case of using non screw anchor (INSI) the minimum length of the screw to be used must fit the table described in part 2.

4. MAXIMUM RECOMMENDED LOADS

CODE			Plasterboard panels						Plaster					
			e = 10 mm		e = 12.5 mm		e = 2x12.5 mm		e = 10 mm		e = 12.5 mm		e = 2x12.5 mm	
Ph slotted recess Bolt	Hexagonal head Bolt	Sleeve only	N_{rec}	V_{rec}	N_{rec}	V_{rec}	N_{rec}	V_{rec}	N_{rec}	V_{rec}	N_{rec}	V_{rec}	N_{rec}	V_{rec}
INCO421	---	**INSI421**	0.20	0.50	0.20	0.50	---	---	0.20	0.50	0.30	0.60	---	---
INCO432	---	**INSI432**	0.20	0.50	0.20	0.50	---	---	0.20	0.50	0.30	0.60	---	---
INCO438	---	**INSI438**	0.20	0.50	0.20	0.50	---	---	0.20	0.50	0.30	0.60	---	---
INCO446	---	**INSI446**	0.20	0.50	0.20	0.50	---	---	0.20	0.50	0.30	0.60	---	---
INCO459	---	**INSI459**	0.20	0.50	0.20	0.50	0.30	0.90	0.20	0.50	0.30	0.60	0.50	0.80
INCO537	---	**INSI537**	0.20	0.50	---	---	---	---	0.25	0.50	---	---	---	---
INCO552	---	**INSI552**	0.20	0.50	0.20	0.50	---	---	0.30	0.60	0.50	1.00	---	---
INCO565	---	**INSI565**	0.20	0.50	0.20	0.50	0.40	1.00	0.30	0.50	0.50	1.00	0.90	1.10
INCO580	---	**INSI580**	0.20	0.50	0.20	0.50	0.40	1.00	0.30	0.50	0.50	1.00	0.90	1.10
---	---	**INSI619**	0.15	0.40	---	---	---	---	0.20	0.50	---	---	---	---
INCO637	---	**INSI637**	0.15	0.40	---	---	---	---	0.20	0.50	---	---	---	---
INCO652	---	**INSI652**	0.20	0.50	0.20	0.50	---	---	0.25	0.80	0.30	1.00	---	---
INCO665	---	**INSI665**	0.20	0.50	0.20	0.50	0.30	0.90	0.25	0.80	0.30	1.00	0.80	1.80
INCO680	---	**INSI680**	0.20	0.75	0.20	0.75	0.30	0.90	0.25	0.80	0.30	1.00	0.80	1.80
	INHE837	---	0.20	0.50	0.20	0.50	---	---	0.40	0.90	0.80	1.20	---	---
---	**INHE855**	**INSI855**	0.20	0.50	0.20	0.50	---	---	0.40	0.90	0.80	1.20	---	---
---	**INHE865**	**INSI865**	0.20	0.50	0.20	0.50	0.40	1.00	0.40	0.90	0.80	1.20	0.90	1.70

Notes:

- 1KN ≈ 100 kg
- Tension and Shear values must be considered separately.